Specifications

备注(Remark)
1.材料(MATERIAL)
胶芯：PA6T+30%G.F UL94V-0，颜色:黑色.
Housing:PA6T+30%G.F UL94V-0,Color:Black
端子：磷/青铜，镍底30u"MIN,表面镀金0.8u"MIN
Contact:Phosphor bronze,0.8u"MIN GOLD PLATING OVER ALL
30u" MIN NICKEL UNDERPLATING OVER ALL
2.特性 (characteristics):
额定电流：2 AMP
Raring Current:2 AMP.
接触阻抗：20 mΩ MAX.
Contact Resistance:20 mΩ MAX.
绝缘阻抗：1000 MΩ MIN.
Insulating Resistance:1000 MΩ MIN.
耐电压：AC 500V/分钟.
Withstanding Voltage:AC 500V/Minute.
温度范围：-40° C to+105° C
Temperture Range: -40° C to+105° C

Ordering Information

F249-12 XX XX X MU X 1

NO.OF PINS PER ROW	Contact Plating Full Of Gold	Contact Plating Semi-gold	INSULATOR MATERIAL:	PACKING
2~40P	A0=0.8u"	B0=0.8U'	B: PA6T	A: PE Bag
	A1=1u"	B1=1U'	C: PA9T	B: Tape & Reel
	A2=1.5u"	B2=1.5U'	D: LCP	C: Tube
	A3=2u"	B3=2U'		D: Tube+CAP
	A4=3u"	B4=3U'		E: Tray
	A5=5u"	B5=5U'		
	A6=10u"	B6=10U'		
	A7=15u"	B7=15U'		
	A8=20u"	B8=20U'		
	A9=30u"	B9=30U'		

S1=Ordinary Tin Plated
S2=Matte Tin Plated
S3=Tin-plated High-temperature

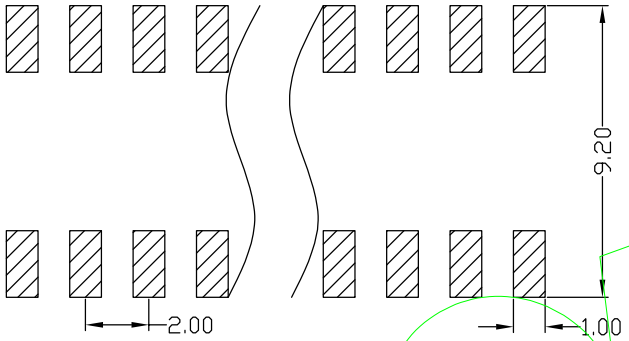

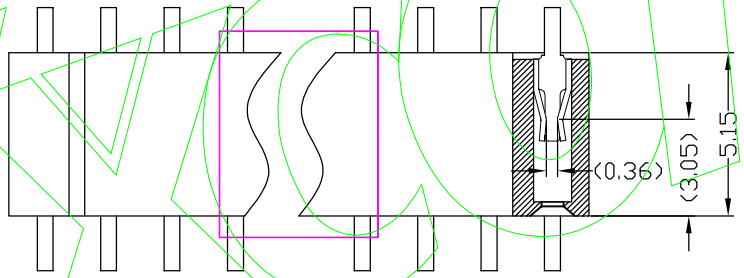

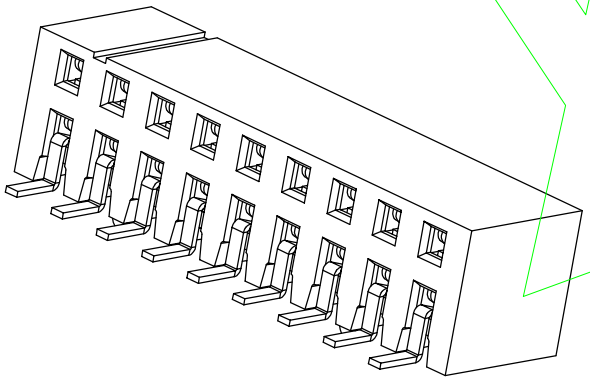

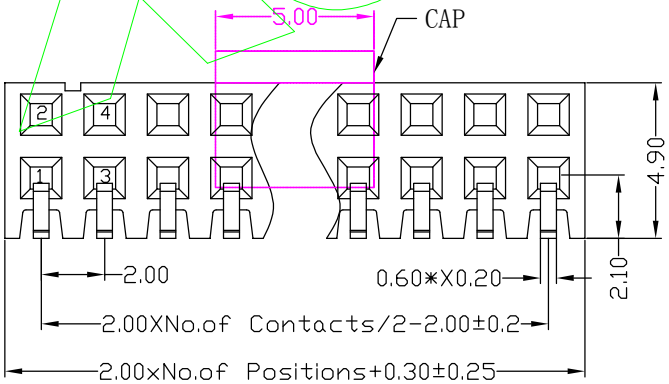

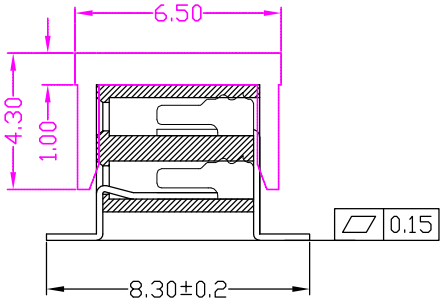

REV	DATE	SYMBOL	MODIFICATION DESCRIPTION

OPERATION	
X.X	±0.25
X.XX	±0.20
X.XXX	±0.10
Angle	±3°
DIM	TOL

SCALE		Fit	Yxcon 东莞市宇熙精密连接器有限公司 www.yxcon.com Dongguan Yuxi Electronic Co.,Ltd.		
UNIT		MM			
SIZE	A4	DESIGN	刘伟 2020.12.03	PART NO.	F249-12XXXXXMUX1
SHEET	1/1	CHECK		TITLE:	2.0间距 塑高4.9 双排母 SMT U型 侧插
PROJ.		APPROVE		Customer No.	

Specifications

备注(Remark)
1.材料(MATERIAL)
胶芯：PA6T+30%G.F UL94V-0，颜色:黑色.
Housing:PA6T+30%G.F UL94V-0,Color:Black
端子：磷/青铜，镍底30u"MIN,表面镀金1u"MIN
Contact:Phosphor bronze,1u"MIN GOLD PLATING OVER ALL
30u" MIN NICKEL UNDERPLATING OVER ALL
2.特性 (characteristics):
额定电流：2 AMP
Raring Current:2 AMP.
接触阻抗：20 mΩ MAX.
Contact Resistance:20 mΩ MAX.
绝缘阻抗：1000 MΩ MIN.
Insulating Resistance:1000 MΩ MIN.
耐电压：AC 500V/分钟.
Withstanding Voltage:AC 500V/Minute.
温度范围：-40° C to+105° C
Temperture Range: -40° C to+105° C

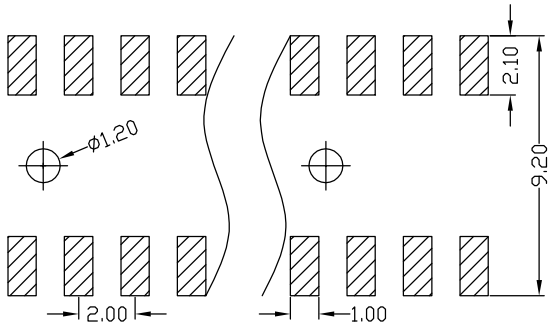

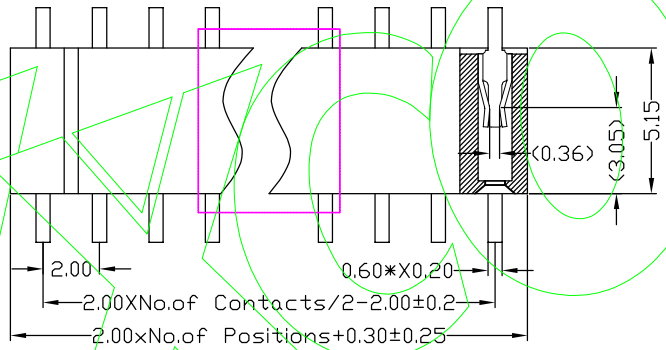

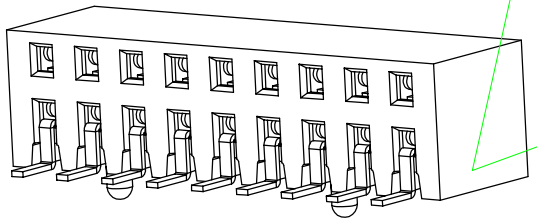

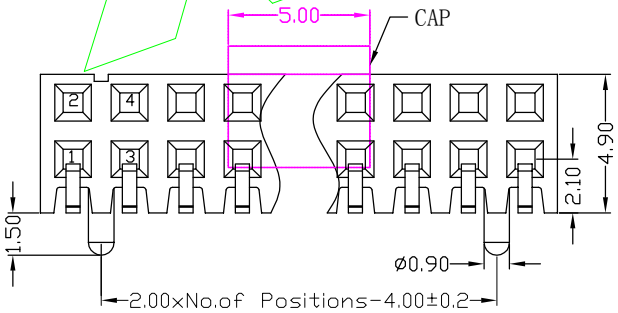

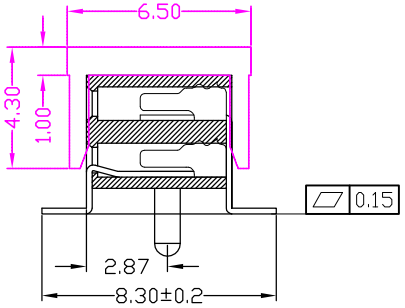

Ordering Information

F249-12 XX XX X MU X 2

NO.OF PINS PER ROW	Contact Plating Full Of Gold	Contact Plating Semi-gold	INSULATOR MATERIAL:	PACKING
2~40P	A0=0.8u"	B0=0.8U'	B: PA6T	A: PE Bag
	A1=1u"	B1=1U'	C: PA9T	B: Tape & Reel
	A2=1.5u"	B2=1.5U'	D: LCP	C: Tube
	A3=2u"	B3=2U'		D: Tube+CAP
	A4=3u"	B4=3U'		E: Tray
	A5=5u"	B5=5U'		
	A6=10u"	B6=10U'		
	A7=15u"	B7=15U'		
	A8=20u"	B8=20U'		
	A9=30u"	B9=30U'		

S1=Ordinary Tin Plated
S2=Matte Tin Plated
S3=Tin-plated High-temperature

Yxcon

REV	DATE	SYMBOL	MODIFICATION DESCRIPTION

OPERATION		SCALE		Fit	
X.X	±0.25	UNIT		MM	
X.XX	±0.20	SIZE	A4	DESIGN	刘伟 2020.12.03
X.XXX	±0.10	SHEET	1/1	CHECK	
Angle	±3°	PROJ.		APPROVE	
DIM	TOL				

Yxcon 东莞市宇熙精密连接器有限公司
www.yxcon.com Dongguan Yuxi Electronic Co.,Ltd.

PART NO.	F249-12XXXXXMUX2
TITLE:	2.0间距 塑高4.9 双排母 SMT U型 侧插 带柱
Customer No.	