Specifications

备注(Remark)
1.材料(MATERIAL)
胶芯：PA9T+30%G.F UL94V-0，颜色:黑色.
Housing:PA9T+30%G.F UL94V-0,Color:Black
端子：磷/青铜，镍底30u"MIN,表面镀金1U"MIN
Contact:Phosphor bronze,1u"MIN GOLD PLATING OVER ALL
30u" MIN NICKEL UNDERPLATING OVER ALL
2.特性 (characteristics):
额定电流：2 AMP
Raring Current:2 AMP.
接触阻抗：20 mΩ MAX.
Contact Resistance:20 mΩ MAX.
绝缘阻抗：1000 MΩ MIN.
Insulating Resistance:1000 MΩ MIN.
耐电压：AC 500V/分钟.
Withstanding Voltage:AC 500V/Minute.
温度范围：-40° C to+105° C
Temperture Range: -40° C to+105° C

Ordering Information

F244-11 XX XX X SU X 1

- NO. OF PINS PER ROW: 1~40P
- Contact Plating
  - Full Of Gold: A0=0.8u" A1=1u" A2=1.5u" A3=2u" A4=3u" A5=5u" A6=10u" A7=15u" A8=20u" A9=30u"
  - Semi-gold: B0=0.8U' B1=1U' B2=1.5U' B3=2U' B4=3U' B5=5U' B6=10U' B7=15U' B8=20U' B9=30U'
  - S1=Ordinary Tin Plated
  - S2=Matte Tin Plated
  - S3=Tin-plated High-temperature
- INSULATOR MATERIAL: B: PA9T C: PA6T D: LCP
- PACKING: A: PE Bag B: Tape & Reel C: Tube D: Tube+CAP E: Tray
- TYPE1: 1 TYPE2: 2

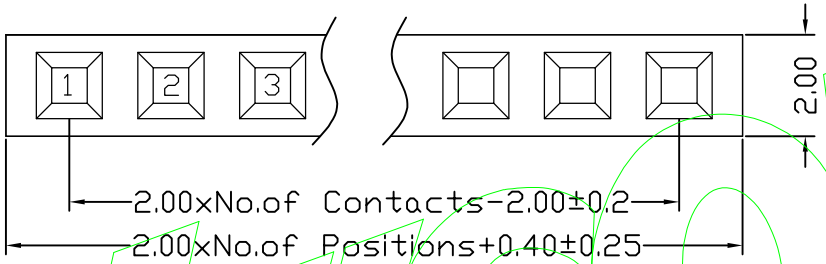

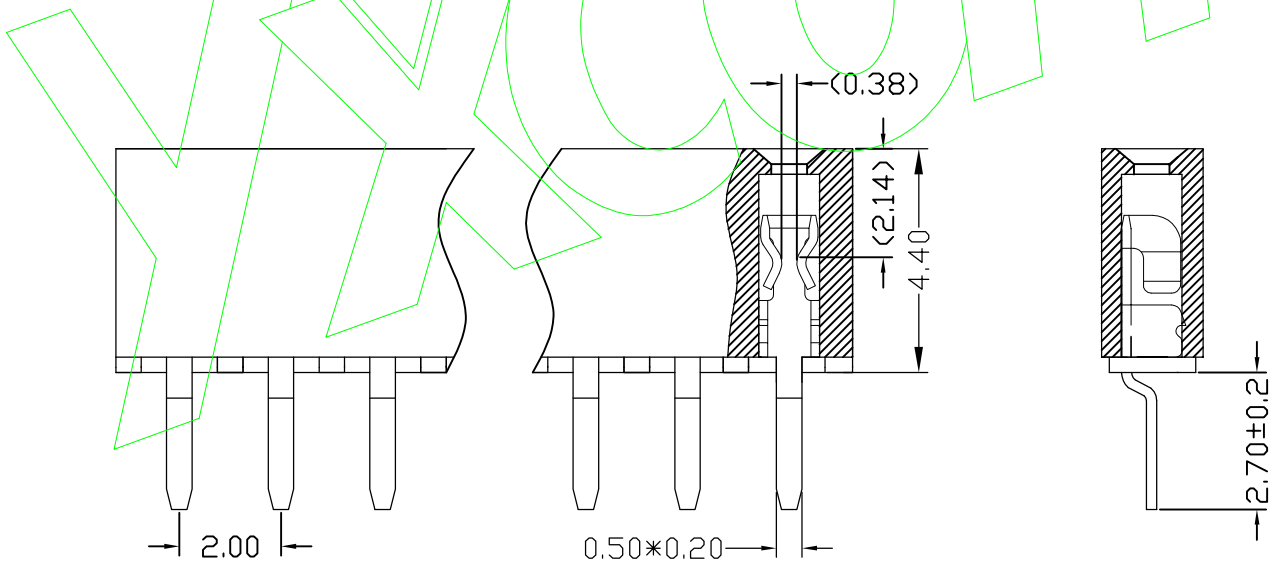

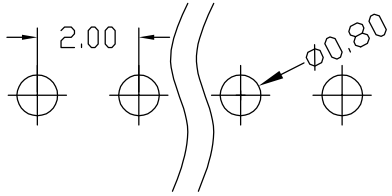

Yxcon

REV	DATE	SYMBOL	MODIFICATION DESCRIPTION

OPERATION	
X.X	±0.25
X.XX	±0.20
X.XXX	±0.10
Angle	±3°
DIM	TOL

SCALE		Fit	
UNIT		MM	
SIZE	A4	DESIGN	刘伟 2020.12.03
SHEET	1/1	CHECK	
PROJ.		APPROVE	

Yxcon 东莞市宇熙精密连接器有限公司
Dongguan Yuxi Electronic Co.,Ltd.

PART NO.	F244-11XXXXXSUX1
TITLE:	2.0间距 塑高4.4 单排母 180镀 U型 倒接式 带杠
Customer No.	