Specifications

WAFER

備注(Remark)
1.材料(Material)
膠芯:PA6T/PA9T UL94V-0
Housing:PA6T/PA9T UL94V-0
端子:黄铜
Contact:Brass

1002WRS-XXA-XXSN

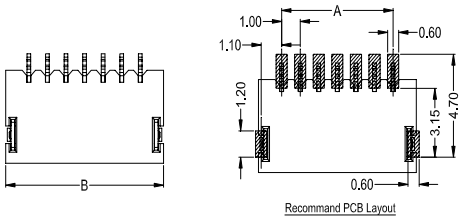

1002WRS-XXA-XXSN

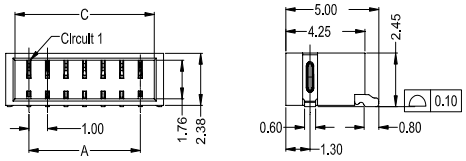

Poles	Dimensions(mm)			Poles	Dimensions(mm)		
	A	B	C		A	B	C
02	1.00	3.50	2.50	12	11.00	13.50	12.50
03	2.00	4.50	3.50	13	12.00	14.50	13.50
04	3.00	5.50	4.50	14	13.00	15.50	14.50
05	4.00	6.50	5.50	15	14.00	16.50	15.50
06	5.00	7.50	6.50	16	15.00	17.50	16.50
07	6.00	8.50	7.50	17	16.00	18.50	17.50
08	7.00	9.50	8.50	18	17.00	19.50	18.50
09	8.00	10.50	9.50	19	18.00	20.50	19.50
10	9.00	11.50	10.50	20	19.00	21.50	20.50
11	10.00	12.50	11.50				

1002WRS-XXA-6TSN	Nylon 6T UL 94V-0	Brass	Tin-Plated
1002WRS-XXA-9TSN	Nylon 9T UL 94V-0	Brass	Tin-Plated
PART N0	Material	Material (Pin And Solder Tabs)	Finish (Pin And Solder Tabs)

Housing

備注(Remark)
1.材料(Material)
膠芯:PA66 UL94V-0
Housing:PA66 UL94V-0

1002H-XXA-N0XXXX

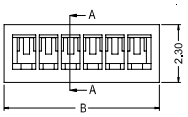

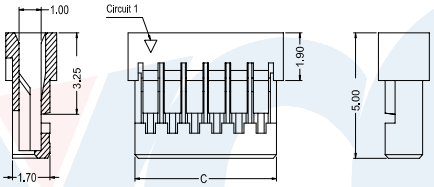

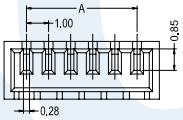

1002H-XXA-N0XXXX

1002H-XXA-N0XXHF	PA66 UL 94V-0 Halogen Free	1002T -A
PART N0	Material	Suitable SWB Terminal

Poles	Dimensions (mm)			Poles	Dimensions (mm)		
	A	B	C		A	B	C
02	1.00	3.00	2.40	12	11.00	13.00	12.40
03	2.00	4.00	3.40	13	12.00	14.00	13.40
04	3.00	5.00	4.40	14	13.00	15.00	14.40
05	4.00	6.00	5.40	15	14.00	16.00	15.40
06	5.00	7.00	6.40	16	15.00	17.00	16.40
07	6.00	8.00	7.40	17	16.00	18.00	17.40
08	7.00	9.00	8.40	18	17.00	19.00	18.40
09	8.00	10.00	9.40	19	18.00	20.00	19.40
10	9.00	11.00	10.40	20	19.00	21.00	20.40
11	10.00	12.00	11.40				

Terminal

備注(Remark)
1.材料(Material)
端子:磷青铜
Contact:Phosphor bronze

1002T-PXX-A

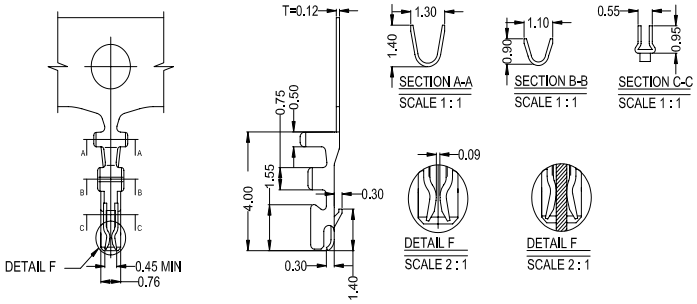

1002T-PXX-A

1002T-PSN2-A	Phospho Bronze	AWG#28-32	0.92mm	Stamping Before Plating:50u" Min Ni;120u"Sn Min	1002H-A、1002H-B
1002T-PV01-A				Stamping Before Pating:30~50u" Ni;Whole Gold :Gold Flash	
1002T-PSN-A				Stamping Before Plating:30~50u" Ni;70~120u"Sn	
PART N0	Material	Wire Range	Insulation O.D.	Finish	Used In SWB Housing

W
WAFER